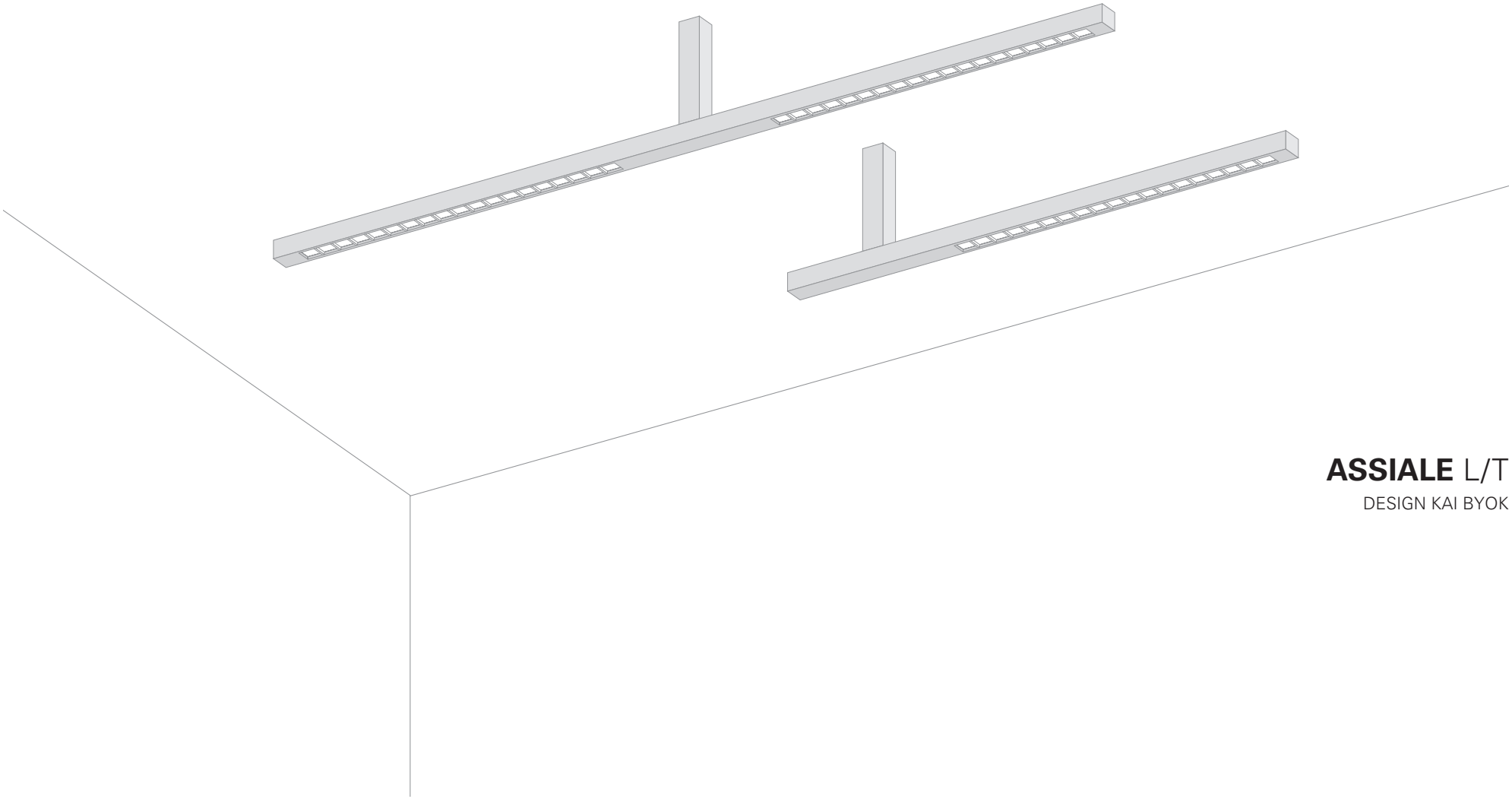

ASSIALE L/T

DESIGN KAI BYOK

TECHNOLOGIEZENTRUM FESTO

Assiale L

Assiale T

Endkappe / *endcaps*

Taster / *pushbutton*

Prismen / *prism*

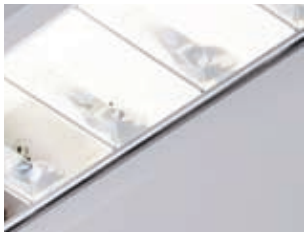

Raster / *darklight louvre*

SYSTEMDARSTELLUNG / *SYSTEM OVERVIEW*

ASSIALE T
AST.228

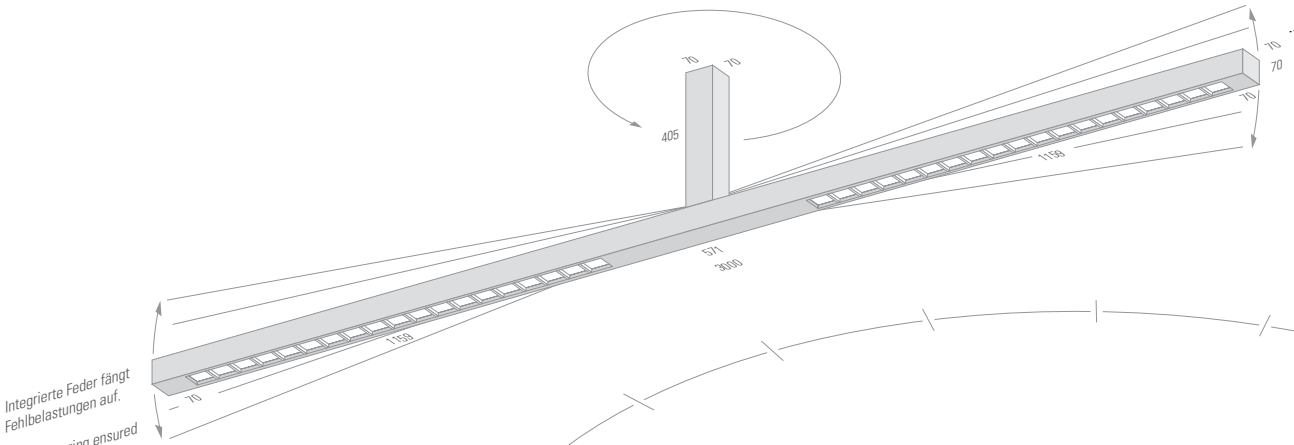

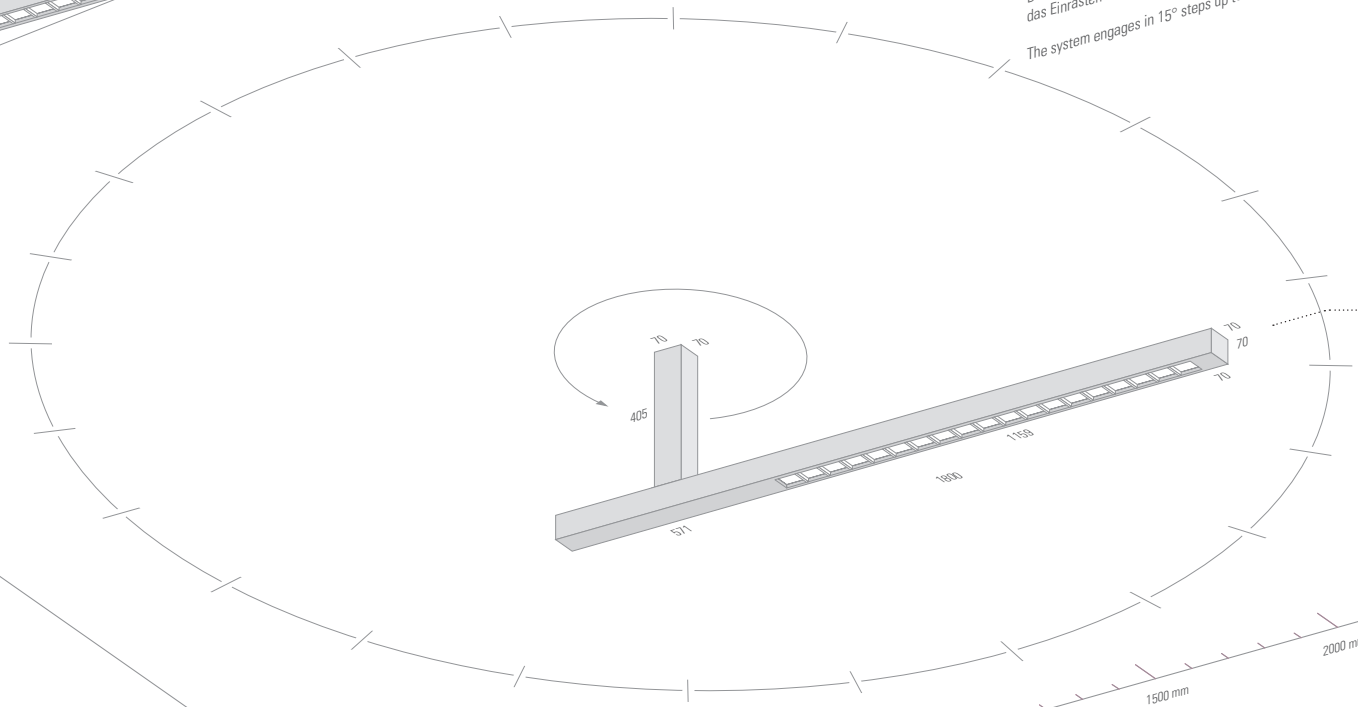

ASSIALE L
ASL.228

Uplight

Up- / Downlight

Downlight